Document Number:
XE-FSA0PM-R0A

AUTOFOAM

AUTOMATIC
AROUND-THE-PUMP
FOAM SYSTEM
MODELS: FSA015, FSA030, FSA060, FSA120

FIRE RESEARCH CORPORATION
www.fireresearch.com
26 Southern Blvd., Nesconset, NY11767
TEL (631) 724-8888 FAX (631) 360-9727 ***TOLL FREE 1-800-645-0074***

CONTENTS

Table of Contents

List of Figures/Tables

INTRODUCTION

Overview

The **AutoFoam** is an around-the-pump foam proportioning metering system. It will automatically maintain a selected foam percent mixture regardless of water flow fluctuations. The **AutoFoam** is microprocessor controlled and is automatic in operation.

The **AutoFoam** has easy to use controls and indicators. It becomes operational at the push of a single button. Push buttons select the foam proportioning percent. An upper multifunction display shows the selected foam %, foam flow, and the total gallons of foam used. A lower multifunction display shows the discharge flow rate and the total gallons of water used. The operator can override automatic control by using the manual override buttons to open or close the foam metering valve.

Around-the-pump proportioning systems operate with an eductor installed between the water pump intake and pump discharge. A small flow of water from the pump discharge passes through the eductor and creates a vacuum that draws foam concentrate into the eductor.

The principle behind the **AutoFoam** system is straight forward. The flow rate on the discharge side of the pump is measured. A metering valve is opened to allow foam concentrate to flow and this flow rate is measured. The program compares the flow rates and adjusts the metering valve to provide the correct amount of foam concentrate. The foam concentrate is injected into the intake side of the pump by a venturi eductor and mixed with water. This produces the correct foam proportioning percent at the pump discharge. The **AutoFoam** constantly monitors foam and water flow and adjusts the metering valve to ensure proper foam proportioning.

Features

Complete Automatic Foam Proportioning

Push Button Control

Flow Totaling for Both Foam and Water

Powers-Up at the Previous Proportioning Percent

Manual Override

Multiple Discharge Sensors (Optional)

Specifications

Power

Supply Voltage:	12 VDC Nominal (24 VDC System Available)
Supply Current:	1.5 Amp Maximum

Foam Concentrate Induction

FSA120:	2 - 120 GPM
FSA060:	1.5 - 60 GPM
FSA030:	0.5 - 30 GPM
FSA015:	0.5 - 15 GPM

Maximum Discharge Flow Rate

All Systems:	3000 GPM (Dependent on % Foam Solution)

Proportioning Ratio

FSA120:	1 - 10 %
FSA060:	0.5 - 6 %
FSA030:	0.5 - 6 %
FSA015:	0.5 - 6 %

Control Module

Power:	12 VDC Nominal
Logic:	8-BIT Microcontroller
Housing:	Painted Aluminum
Weight:	2 LBS
Environmental:	Totally Sealed Enclosure with O-Rings
Connectors:	Deutsch, Industrially Sealed

Discharge Flow Sensors

Type:	Paddlewheel Type (Optional Moounts)
Sensor Material:	Acetal (Delrin) with Stainless Steel (316) Shaft

Metering Valve Assembly

Valve:	Variable Orifice Linear Flow, With Position Sensing
Flow Sensors:	Paddlewheel Type
Weight:	24 LBS
Overall Length:	16.25"
Overall Height:	10"
Couplings	
FSA120:	2.0"
FSA060:	1.5"
FSA030	1.5"
FSA015:	1.5"

Eductor

Material:	Stainless Steel (304)
Weight:	4.2 LBS (FSA120)
Length	
FSA120:	20"
FSA060:	12.5"
FSA030	12.5"
FSA015:	12.5"
Water Flow Rate Through Eductor @ 150 PSI	
FSA120:	205 GPM
FSA060:	130 GPM
FSA030:	130 PM
FSA015:	50 GPM
Couplings:	Victaulic (Grooved Type)
FSA120:	Water Inlet 2.0", Foam Inlet 2.0", Discharge 2.0"
FSA060:	Water Inlet 1.5", Foam Inlet 1.5", Discharge 1.5"
FSA030:	Water Inlet 1.5", Foam Inlet 1.5", Discharge 1.5"
FSA015:	Water Inlet 1.5", Foam Inlet 1.5", Discharge 1.5"

GENERAL DESCRIPTION

Components

The **AutoFoam** system consist of the following components (Refer to Figure 1):

Control Module

Metering Valve Assembly

Eductor

Discharge Flow Sensor(s) and Sensor Housing(s)

Summing Device

Cables

Control Module

The control module is panel mounted and has a front bezel measuring 4.25 by 4.25 inches. All controls and indicators are located on the front of the control module. (Refer to Controls and Indicators.)

Metering Valve Assembly

The metering valve assembly includes a foam metering valve, two paddlewheel type flow sensors, and mounting flanges. The metering valve has a position transducer and it is internally calibrated for flow. The meter valve housing is brass. The flow sensors are in stainless steel mounts.

Eductor

The eductor is located in a water by-pass loop and foam is sucked through it into the suction side of the pump. It is made of stainless steel or brass.

Discharge Flow Sensor(s)

The discharge flow sensor is mounted on the pump discharge manifold. It provides an input signal to the summing device that is proportional to the discharge flow. If the multiple discharge flow sensor option is installed discharge flow sensors will be mounted at each discharge.

Summing Device

The summing device is connected between the control module and the flow sensors. It contains the potentiometers used in flow calibration and provides flow datd to the control module.

Cables

Interconnecting cables are provided. (Refer to Install Cables.)

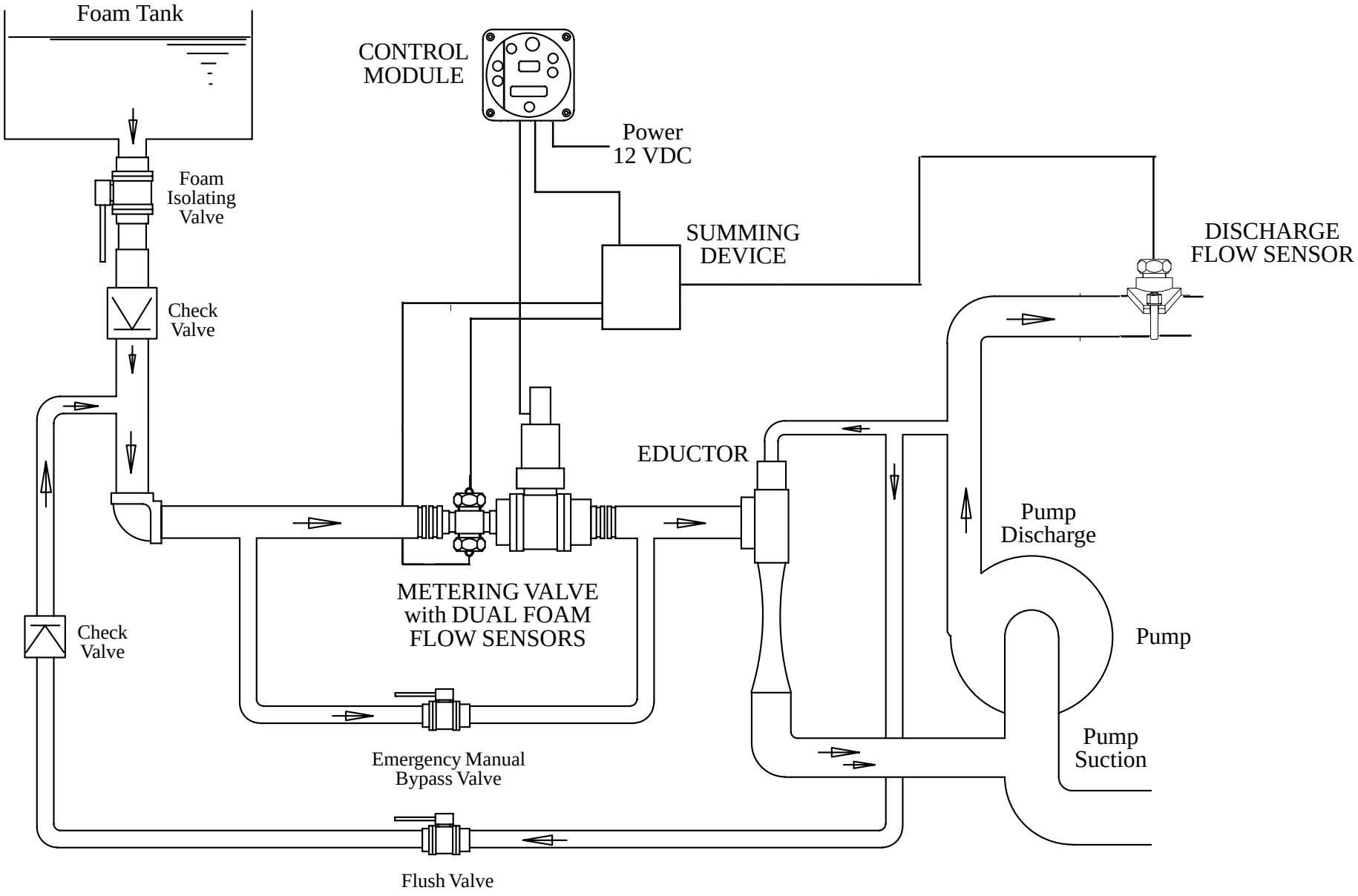

Figure 1. Plumbing Schematic

Controls and Indicators

All controls and indicators are located on the front of the control module. It contains the push button electronic controls and digital displays. (Refer to Figure 2.)

OFF Button

Press this button to turn the AutoFoam system off. The metering valve will go to the closed position.

FOAM ON Button

Press this button to put the AutoFoam system in the automatic mode. It is used at start up, to exit the manual override mode, or to show the selected foam percent in the upper display.

Upper Display

An upper multifunction display shows foam concentrate flow, selected foam percent, or the total gallons of foam concentrate used. The display will show OFF when the system is off. When the system is turned on the selected foam percent is displayed for three seconds then foam flow is displayed. When the FOAM % buttons are pressed the display will show the selected foam percent for three seconds then go back to show foam flow.

FOAM % Buttons

Press these buttons to raise or lower the percent of foam that is inducted. When the increase or decrease button is pressed the upper display will show the selected percent.

Lower Display

A lower multifunction display shows the discharge flow rate and the total gallons of water used. If there is water flow on the discharge side of the pump, flow rate will be displayed even if the AutoFoam system is off.

TOTAL Button

Press and hold the TOTAL button to display the total gallons of foam (upper display x 1) and water (lower display x 100) that has been discharged.

Manual OVERRIDE Buttons

Press and hold the OPEN or CLOSE button for three seconds to set the system in manual mode. The upper and lower displays will flash to indicate the system is in manual mode and they will continue to show correct foam and water flow rates. In the manual mode the operator is in control of opening or closing the foam metering valve to set how much foam concentrate flows. To exit the manual mode the FOAM ON button is pressed to start the automatic mode or the OFF button is pressed to turn the system off.

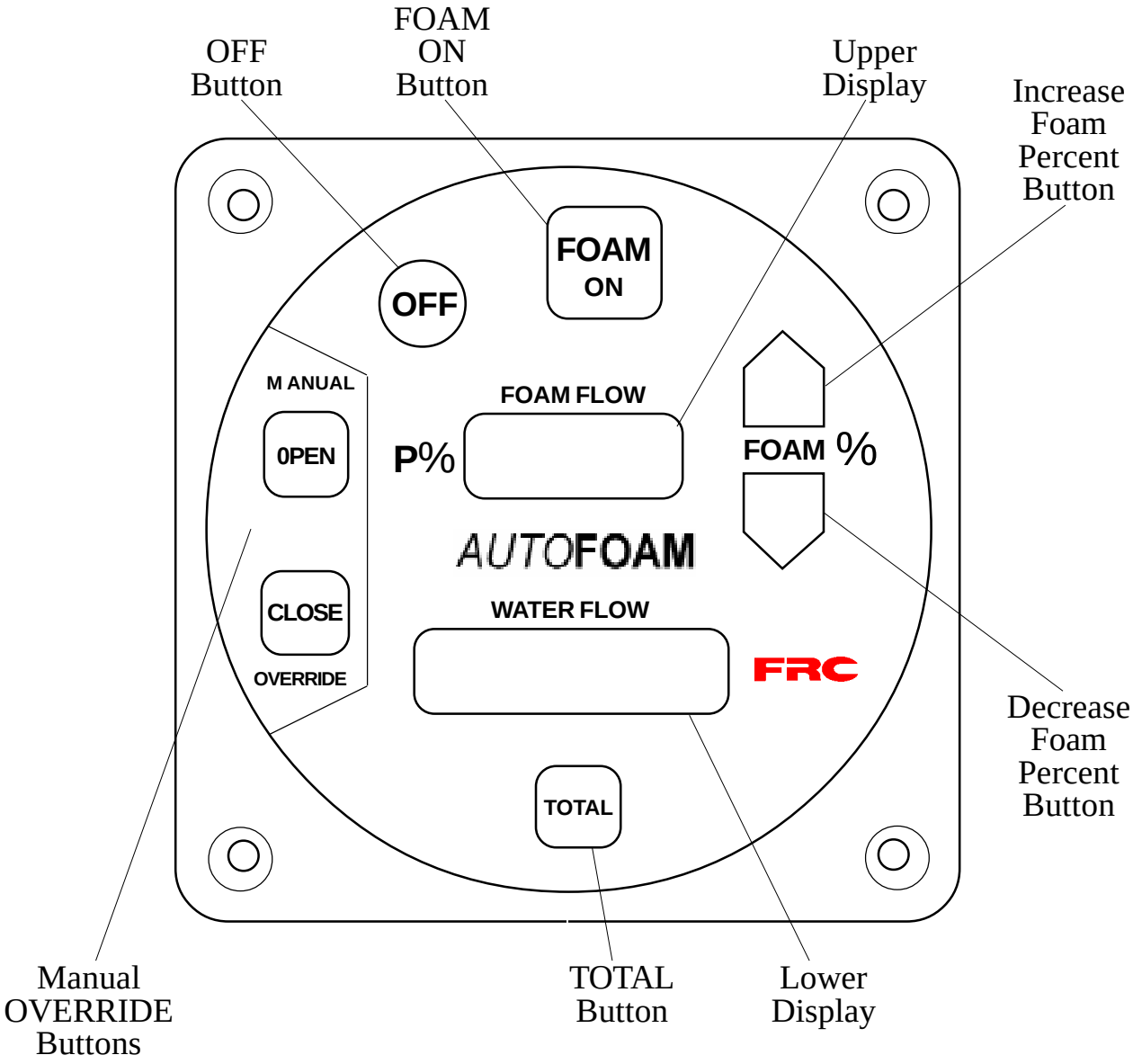

Figure 2. Controls and Indicators

INSTALLATION

Note: Plumbing systems are always unique and may cause small deviations in the factory calibration. It is recommended that the calibration procedure be performed after installation.

Install Control Module

1. Measure and mark mounting location for control module panel cutout and mounting screw holes. Make sure there is clearance behind the panel before cutting holes. Refer to Figure 3 for layout and dimensions.
2. Cut out a 3.75-inch diameter hole and drill four holes for 10-32 mounting screws.
3. Place the control module in position and secure with four screws.

Install Metering Valve Assembly and Eductor

Four (4) piping connections must be made. (Refer to Figure 4.) Recommended interconnecting pipe diameters for FSA120 are 2.0" and for FSA015/030/060 use 1.5".

Note: It is important that the metering valve assembly and the eductor be mounted below the bottom of the foam tank.

Note: The metering valve assembly must be mounted so that the motor assembly is on top.

1. Connect the **pump discharge to the eductor inlet (A).** Reinforced hose may be used. If the water flow to the eductor needs to be shut off, a valve may be placed in this line. This valve should have a 2.0" (1.5" for FSA015/030/060) throat and should be at least six (6) inches away from the eductor.
2. Connect the **metering valve assembly outlet to the eductor foam inlet (B).** Piping must have groove couplings.
3. Connect the **pump suction to the eductor discharge (C)**. Reinforced hose may be used.
4. Connect the **foam tank to the metering valve assembly foam inlet (D).** Reinforced hose may be used. (The metering valve assembly inlet is the side where the two foam flow sensors are located). The piping into the metering valve assembly inlet must have a straight run of at least eight (8) inches. A check valve *must* be placed in this line at least one (1) foot away from the metering valve assembly inlet. A swing-check valve is preferred.

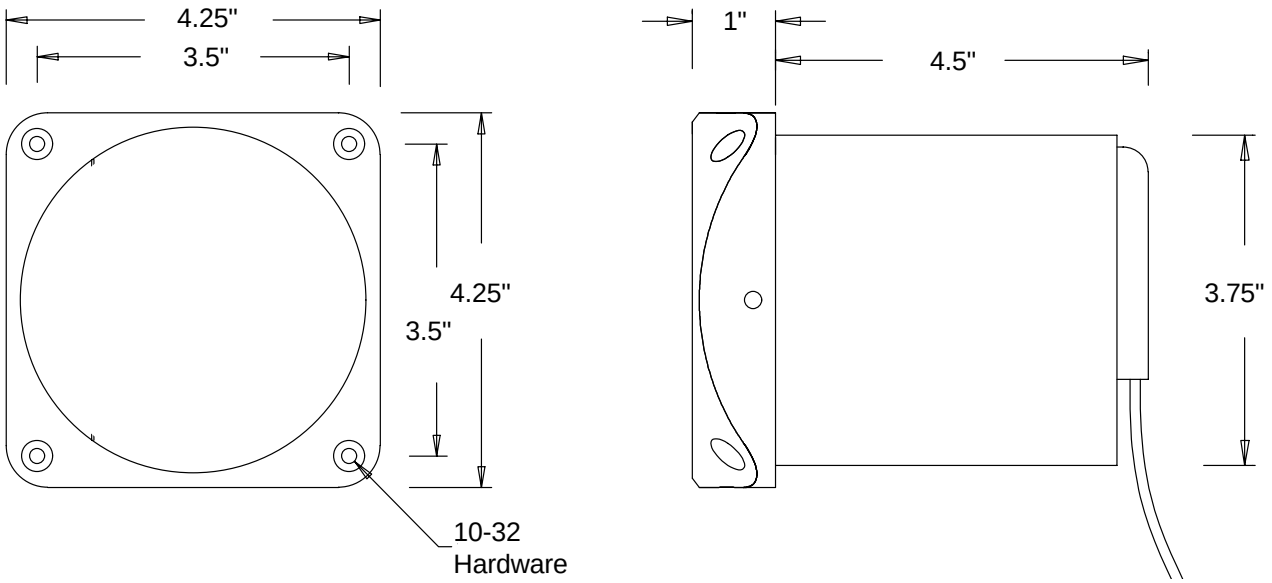

Figure 3. Control Module Dimensions

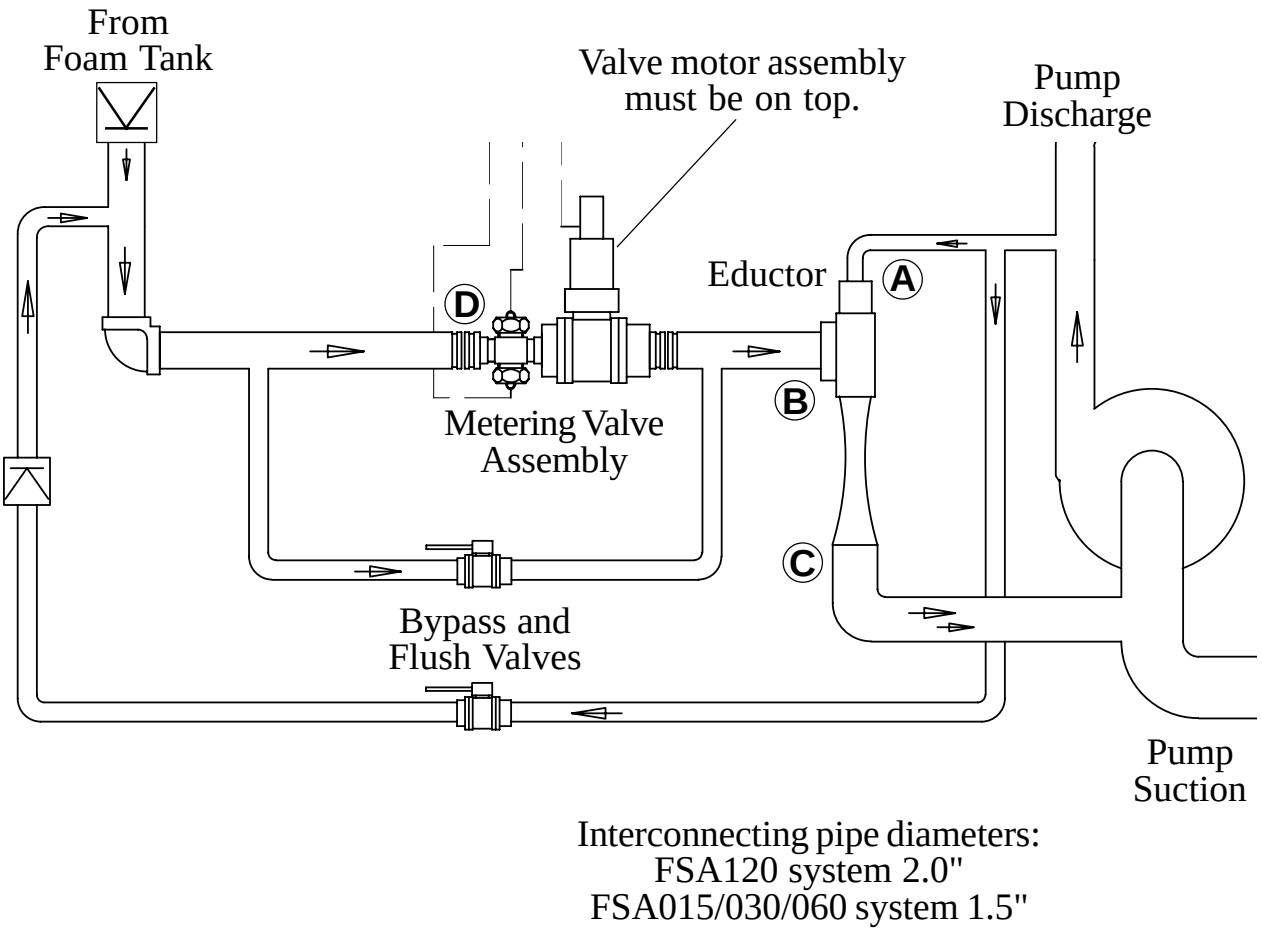

Figure 4. Metering Valve Assembly and Eductor Installation

Install Flow Sensor(s)

There are several ways to install FRC paddlewheel type flow sensors. Mounting options include saddle clamps, weldments, pipe tees, and special adapters. Each mount will meet particular plumbing requirements.

The maximum pressure for a flow sensor installation is 600 PSI.

Note: Plumbing systems are always unique and may cause small deviations in the factory calibration. It is recommended that the calibration procedure be performed after installatoin .

Flow Sensor Location

The location of the flow sensor in the plumbing system is critical. The flow of water at and around the sensor must be laminar, or smooth, to ensure accurate flow measurements. There must be enough straight pipe run before the flow sensor location to allow the water stream to stabilize into a uniform flow. Guidelines for selecting flow sensor locations are outlined in Figure 5.

When the sensor is mounted after an area in the plumbing that tends to increase water stream turbulence (a valve, increase in pipe diameter, etc.), it is critical that steps are taken to stabilize the flow.

- When a pipe is reduced in diameter the water stream tends to be squeezed into a more uniform flow. This can be used to help stabilize flow when there is not a sufficient pipe run up stream.
- FRC offers an optional flow conditioner that replaces the standard sensor housing. It protrudes into the water stream at the sensor location and is specially shaped to reduce local turbulence.

The preferred location for the mounting of a flow sensor is on the top half of the pipe. The best orientation is vertical. If the sensor is mounted on the bottom of the pipe, it may be susceptible to the accumulation of dirt.

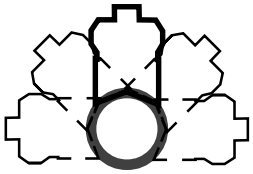

Best Orientation

When mounting the sensor after the pipe diameter is reduced the length L must be at least 2 times the pipe diameter.

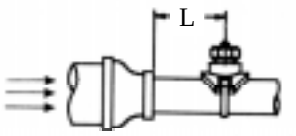

After Reduction
L > 2 X PIPE DIA.

When mounting the sensor after a valve the length L must be at least 14 times the pipe diameter.

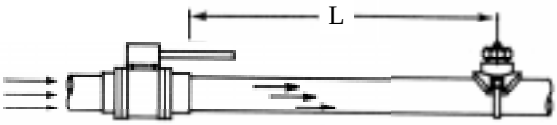

After Valve
L > 14 X PIPE DIA.

When mounting the sensor after an elbow the length L must be at least 6 times the pipe diameter.

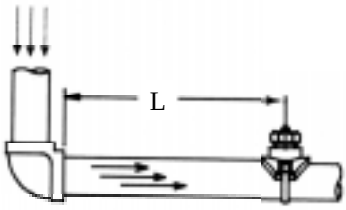

After Elbow
L > 6 X PIPE DIA.

When mounting the sensor before a valve or an elbow the length L must be at least equal to the pipe diameter.

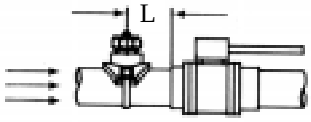

Before Valve or Elbow
L > 1 X PIPE DIA.

Figure 5. Flow Sensor Location Guidelines

Saddle Clamp Installation

Note: Ensure that the mounting location meets the requirements for uniform water flow. (Refer to Flow Sensor Location.)

Note: Ensure that there is enough room for the saddle clamp, sensor, and connector to fit. (Refer to Figure 6.)

1. Drill and deburr a 1-11/16" to 1-3/4" diameter hole at mounting location.
2. Clean pipe surface in area where saddle clamp gasket will seal.

Note: The sensor housing is epoxied in the saddle clamp with the alignment tab in the correct position and is not meant to be removed.

3. Place saddle clamp over hole with sensor housing centered.
4. Tighten saddle clamp nuts until gasket makes a good tight seal.
5. Insert flow sensor into sensor housing. Align flat spot on sensor rim with alignment tab and make sure o-ring is in the groove.

Note: The retainer cap only needs to be hand tightened. There is an inside lip that will stop the cap from turning when it makes contact with the alignment tab. This provides the correct pressure to make the seal at the o-ring. Make sure the flow sensor does not disengage from the alignment tab and rotate.

6. Install retainer cap and hand tighten.
7. Connect flow sensor cable. (Refer to Install Cables.)

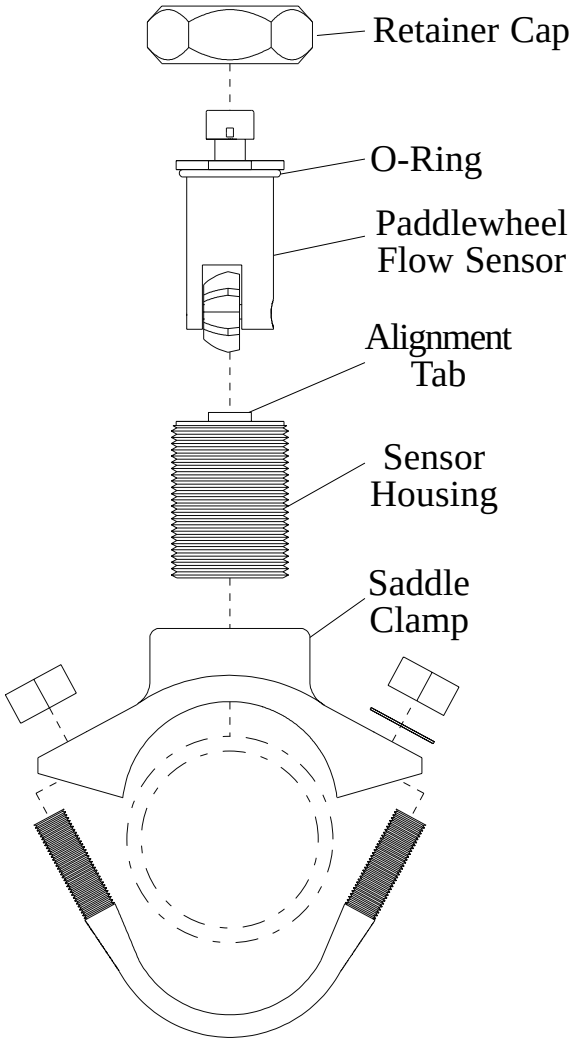

Pipe Size (Sch 40)	Dimensions A	B	C
2	5.5	3.9	2.9
2.5	5.5	3.9	2.8
3	5.9	3.9	2.8
3.5	6.8	4.3	2.8
4	6.8	4.3	2.8
5	8	4.3	2.8

Measurements are in inches.

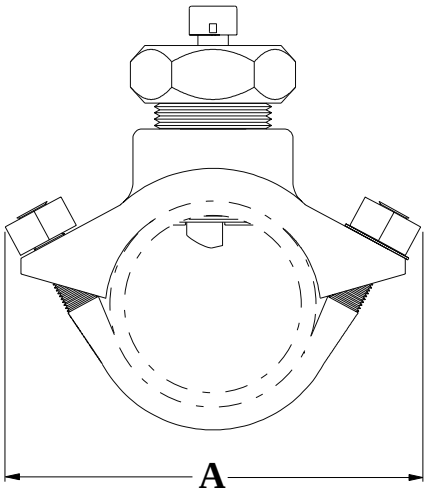

Note: Allow a minimum of 2 inches clearence at the sensor top for removal/installation of the connector.

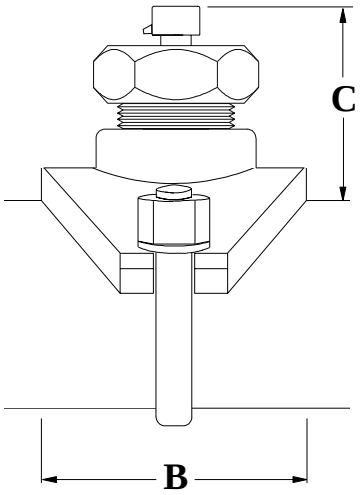

Note: When the retainer cap is tightened make sure the sensor rim flat spot does not disengage from the alignment tab and allow the flow sensor to rotate.

Note: These dimensions are typical and are given to be used as an aid in determining mounting locations for flow sensors.

Figure 6. Saddle Clamp Installation

Weldment Installation

Note: Ensure that the mounting location meets the requirements for uniform water flow. (Refer to Flow Sensor Location.)

Note: Ensure that there is enough room for the weldment, sensor, and connector to fit. (Refer to Figure 7.)

1. Drill and deburr a 1-11/16" to 1-3/4" diameter hole at mounting location.
2. Center weldment mount over hole and weld it to pipe. The weld must be continuous around the fitting with no gaps or voids.
3. Screw sensor housing into weldment. Run it down far enough to make sure it will go through the pipe freely then back it out.

Note: The paddlewheel sensor must be correctly aligned in the water stream. The alignment tab is used to set the position of the sensor. Make sure that the alignment tab is centered on the pipe centerline. (Refer to Figure 7.)

4. Set sensor housing to dimension A in Figure 7. Make sure the alignment tab is centered on the pipe as shown (it can be on upstream or downstream side).
5. Screw on tru-seal locknut and tighten with a 2" wrench using light to medium torque. Make sure that housing does not rotate causing dimension A to change and the sensor housing alignment tab remains centered.
6. Insert flow sensor into sensor housing. Align flat spot on sensor rim with the alignment tab and make sure o-ring is in groove.

Note: The retainer cap only needs to be hand tightened. There is an inside lip that will stop the cap from turning when it makes contact with the alignment tab. This provides the correct pressure to make the seal at the o-ring. Make sure the flow sensor does not disengage from the alignment tab and rotate.

7. Install retainer cap and hand tighten.
8. Connect flow sensor cable. (Refer to Install Cables.)

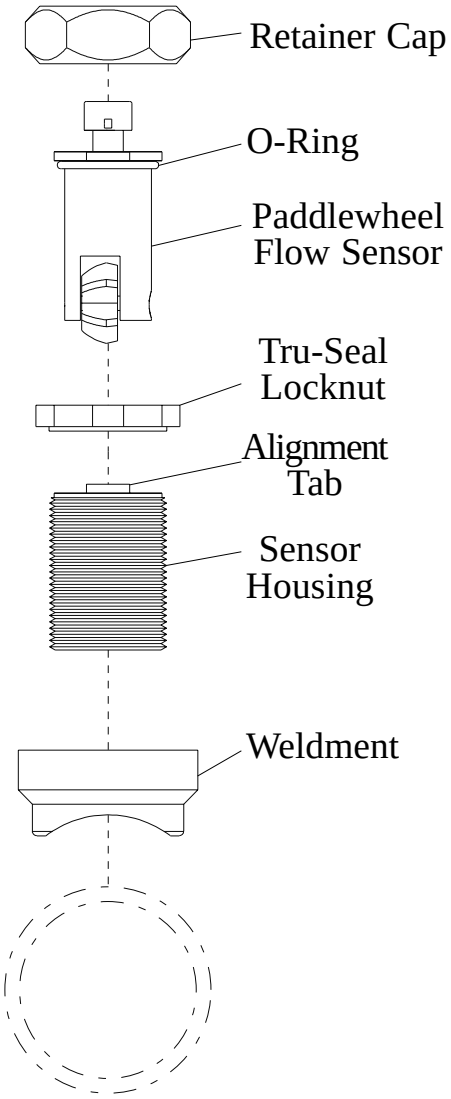

Pipe Size (Sch 40)	Dimension **A**
1.5	1.95 to 1.80
2	1.95 to 1.80
2.5	1.90 to 1.75
3	1.88 to 1.73
3.5	1.88 to 1.73
4	1.85 to 1.70

Measurements are in inches.

Make sure that the alignment tab is centered on the pipe centerline.

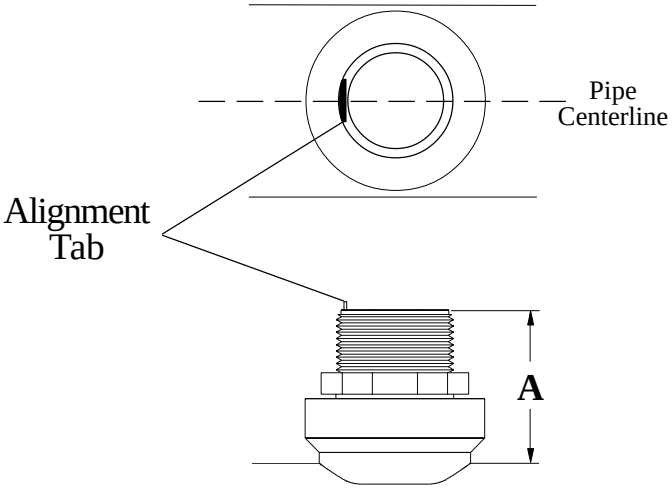

Note: Allow a minimum of 2 inches clearence at the sensor top for removal/ installation of the connector.

Note: When the retainer cap is tightened make sure the sensor rim flat spot does not disengage from the alignment tab and allow the flow sensor to rotate.

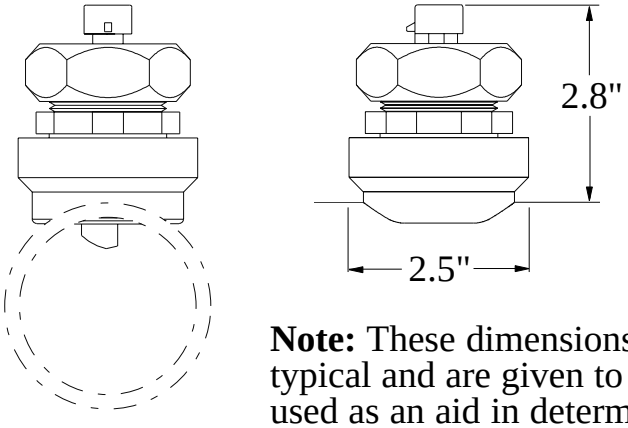

Note: These dimensions are typical and are given to be used as an aid in determining mounting locations for flow sensors.

Figure 7. Weldment Installation

Install Summing Device

The summing device mounts with two screws. Make sure there is room to connect the cables and adjust the potentiometers.

Install Cables

Cables need to be connected from the control module to power, to the metering valve, and to the summing device. The standard AutoFoam has three cables connected from the summing device to the flow sensors. (Refer to Figure 8.)

1. Connect the control module power cable. A 5' power extension cable is provided. Connect the extension cable red wire to the truck 12/24 VDC (positive). Connect the black wire to ground.
2. Connect two (2) foam flow sensors to the summing device with the extension cables supplied .
3. Connect the discharge flow sensor to the summing device with the extension cable supplied.

   For the multiple discharge flow sensor option, connect all discharge flow sensors to the discharge flow summing device. The output of the discharge flow summing device is then connected to the AutoFoam summing device. (If a flow display is needed, a Y-cable can be used to connect the flow sensor to both the summing device and a flow display.)
4. Connect the summing device to the control module.
5. Connect the metering valve to the control module.

Perform the Static Operational Check at this time to verify manual operation of the metering valve. (Refer to Operation section.)

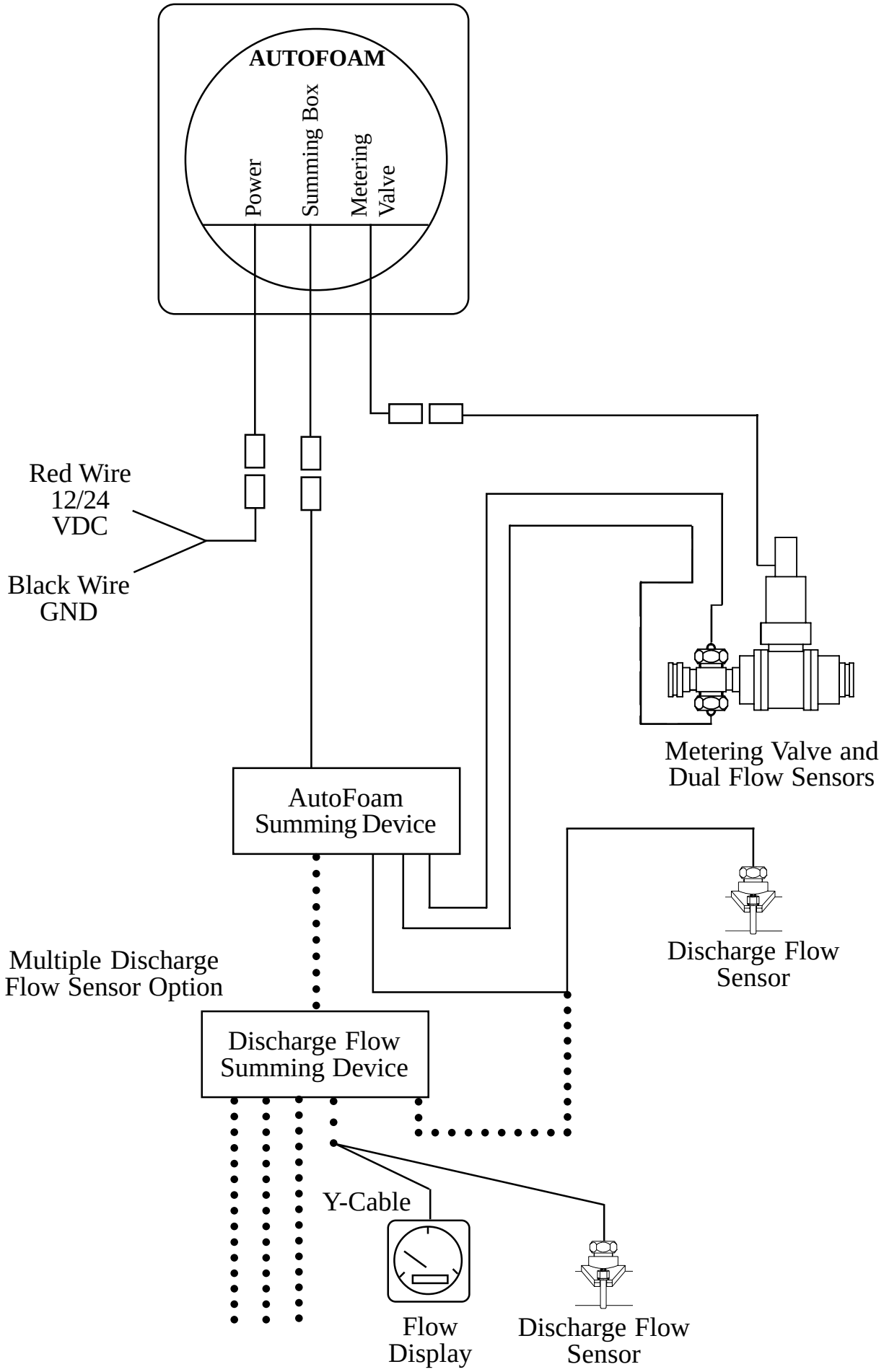

Figure 8. Cables

THEORY OF OPERATION

The operation of the AutoFoam system is controlled by a microprocessor housed in the control module. The programming enables the AutoFoam system to operate in three different modes.

Automatic Mode

This is the normal mode of operation. In this mode of operation the flow rate of foam concentrate is determined by the percent selected on the control module and inputs from the flow sensors. The microprocessor controls the opening or closing of the metering valve to provide the correct foam solution at the pump discharge.

When in the automatic mode the flow sensors provide constant feedback of flow rate information. Dual flow sensors mounted on the metering valve assembly monitor foam concentrate flow rate. The discharge flow sensor measures the solution (foam concentrate and water mixture) flow rate at the discharge side of the pump. This flow rate information allows the system to maintain the selected foam proportioning regardless of discharge fluctuations.

The metering valve controls the amount of foam concentrate that flows into the eductor. The eductor injects the foam concentrate into the suction side of the pump. The flow rates of the foam concentrate and the foam solution is processed. The flow rates are displayed and the metering valve is adjusted to produce the selected foam proportion.

If input data from one of the dual foam concentrate flow sensors is lost the program will automatically use the information from the one that is operating properly. There is no loss in performance or accuracy of the system. If input data from both foam flow sensors is lost, the AutoFoam system will switch over to the fixed program mode.

Fixed Program Mode

The system will enter this mode when there is no input data from both foam concentrate flow sensors. In this mode of operation the flow rate of foam concentrate is determined by information stored in the AutoFoam program. When the system is in this mode an F will be shown in the upper display. The AutoFoam system will exit the fixed program mode automatically when input data from a foam concentrate flow sensor is detected.

The foam concentrate flow rate is determined by the percent selected on the control module and water flow at the discharge. It is an important factor in determining if there is a failure in the AutoFoam system when there is no input data from the foam concentrate flow sensors.

When in the fixed program mode stored precalibrated valve position data is used to adjust the metering valve. There is a transducer in the valve assembly that provides feedback on the valve position. The valve position is directly related to how much foam concentrate flows. The program uses the selected foam proportion percent and the discharge water flow rate to position the valve for the correct foam concentrate rate of flow.

Foam concentrate flow rate less than 9 GPM: At flow rates of 9 GPM or less there is no output from the flow sensors. This low flow rate is below the minimum that the flow sensors can detect and they will not provided flow rate data. This condition does not indicate a failure in the AutoFoam system and will exist if the proportioning percent and the water flow at the discharge sensor are low.

Foam concentrate flow rate greater than 9 GPM: If there is no output from the flow sensors a failure in the AutoFoam system is indicated. The upper display will show an E 2 code when the system is turned off to alert the operator that a failure occurred. This condition would exist if both foam flow sensors are inoperable because of some mechanical failure. This could include clogged foam lines or sensors, disconnected sensor or metering valve cables, open wiring, or no foam in the tank.

When in the fixed program mode stored precalibrated valve position data is used to adjust the metering valve. There is a transducer in the valve assembly that provides feedback on the valve position. The valve position is directly related to how much foam concentrate flows. The program uses the selected foam proportion percent and the discharge water flow rate to position the valve for the correct foam concentrate rate of flow.

Manual Mode

When the Manual OVERRIDE OPEN or CLOSE button is pressed and held for three seconds the system will switch to manual mode. The upper and lower displays will flash to indicate the system is in the manual mode. The displays will continue to show correct foam and water flow rates.

When in the manual mode the operator is in control of the amount of foam concentrate that goes into solution. The OPEN and CLOSE push buttons are used to control the opening and closing of the metering valve. As the metering valve is opened or closed the rate of flow of foam concentrate that is injected into solution is changed.

It is up to the operator to monitor the amount of foam in solution at the discharge and make adjustments manually. The OPEN button will increase the amount foam in the solution, the CLOSE button will decrease the amount of foam in the solution.

To exit the manual mode the FOAM ON button is pressed to start the automatic mode or the OFF button is pressed to turn the system off.

OPERATION

Static Operational Check

This check should be performed after installation, maintenance, or repairs. It is a valuable tool if troubleshooting is necessary. It test the power and control module to metering valve wiring, and the manual operation of the metering valve.

Note: Do not flow water or foam for this test.

1. Ensure that the polarity of the control module 12 VDC power connection is correct. (The red wire is +12 VDC, the black wire is ground.)
2. Turn on power.

   Result: Upper display shows **OFF**.
3. Press FOAM ON button.

   Result: Upper display shows a **P** on left and the last selected percent on right. After 3 seconds the display shows **0**.
4. Press and hold increase Foam % button.

   Result: Upper display shows **P** on left and increasing number on right.
5. Release increase Foam % button.

   Result: After 3 seconds the display shows **0**.
6. Press and hold decrease Foam % button.

   Result: Upper display shows **P** on left and decreasing number on right.
7. Release decrease Foam % button.

   Result: After 3 seconds the display shows **0**.
8. Press and hold Manual OVERRIDE **OPEN** (or **CLOSE)** button for at least 3 seconds.

   Result: Both displays flash to indicate the system is in manual mode.

Note: A brass nut on the metering valve assembly will rotate indicating the physical movement of the valve. Between the closed and open positions the nut will rotate approxitmatly 12 turns.

9. Press and hold **OPEN** button to run the metering valve to fully open position. Make sure it moves freely without any physical obstructions. (The valve will stop turning when it reaches the fully opened position.)
10. Press and hold **CLOSE** button to run the metering valve to fully closed position. Make sure it moves freely without any physical obstructions. (The valve will stop turning when it reaches the fully closed position.)

Pump Intake and Discharge Pressure Requirements

WARNING: If the recommended minimum pump discharge pressures are not adhered to, the foam system may operate at partial capacity or fail to inject foam.

Note: It is recommended that standard operating procedure be to *gate the pump input pressure at less than 20 PSI* and *adjust the discharge pressure to more than 140 PSI* when foam is used.

For efficient operation around-the-pump foam proportioning systems require a pump intake to discharge pressure differential. It is recommended that the pump intake pressure be less than 20 PSI. If operation at a higher intake pressure is necessary the pressure differential shown in Table 1 has to be adhered to.

Table 1. Pump Pressure Requirements

Pump Intake Pressure	Minimum Pump Discharge Pressure
0*	85
20	140
40	200
50	240
70	300

***Note:** When pumping in draft consider the intake pressure to be 0 PSI.

Operational Check

It is very expensive to use foam to test the system. As an alternative a die (e.g. red) can be used to color water in the foam tank. The color of the discharge allows the change in foam concentration to be observed. A lighter color indicates less foam in proportion to water while a darker color indicates more foam in proportion to water.

(Refer to Figure 9 for control module sample displays.)

1. Ensure that the pump intake and discharge pressures will be within minimum requirements. (Refer to Table 1.)
2. Ensure that the bypass valve and flush valve are closed. Ensure there is enough foam (colored water) in the foam tank to run this check.
3. Open the foam isolating valve (and the eductor water valve if installed).
4. Pump water. The lower display shows the discharge flow.
5. Press FOAM ON button. The system will be in automatic mode. The upper display shows the last used proportion percent selected.
6. Press FOAM % increase and decrease buttons to change the foam proportion. (Foam concentrate (or colored water) will start to be injected if water is flowing through the pump.) Set the desired foam proportion percent. When the FOAM % button is pressed the upper display will show the selected percent for 3 seconds then show foam concentrate flow in GPM.

Note: This system can be operated in the manual mode. The metering valve is opened or closed manually using the Manual OVERRIDE buttons to change the foam proportioning percent. The operator has to monitor the discharge flow and make corrections for foam proportioning.

7. Press and hold Manual OVERRIDE OPEN or CLOSE button for 3 seconds. The system will go into manual operation and the upper and lower displays will flash. The operator is in control of the metering valve position. The valve position is adjusted by pressing the OPEN or CLOSE push buttons. The position of the valve determines the foam concentrate rate of flow.
8. Press FOAM ON button to revert to automatic mode.
9. Press and hold TOTAL button to display the total gallons of foam and water discharged. The upper display (x 1) shows the amount of foam concentrate discharge and the lower display (x 100) shows the amount of water discharged.
10. Press OFF button to turn off the AutoFoam.

Note: The foam system should be flushed after each use. (Refer to Maintenance section.)

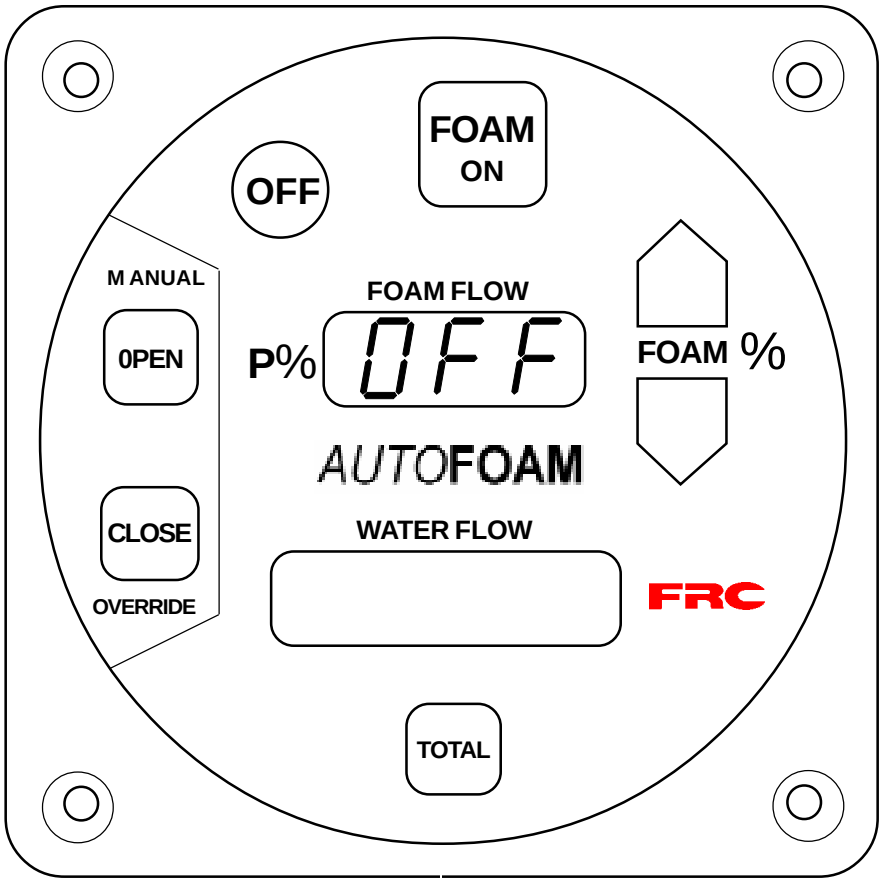

AutoFoam system is off.

Upper display shows OFF.

Lower display is blank or if pump is running shows water flow at discharge sensor.

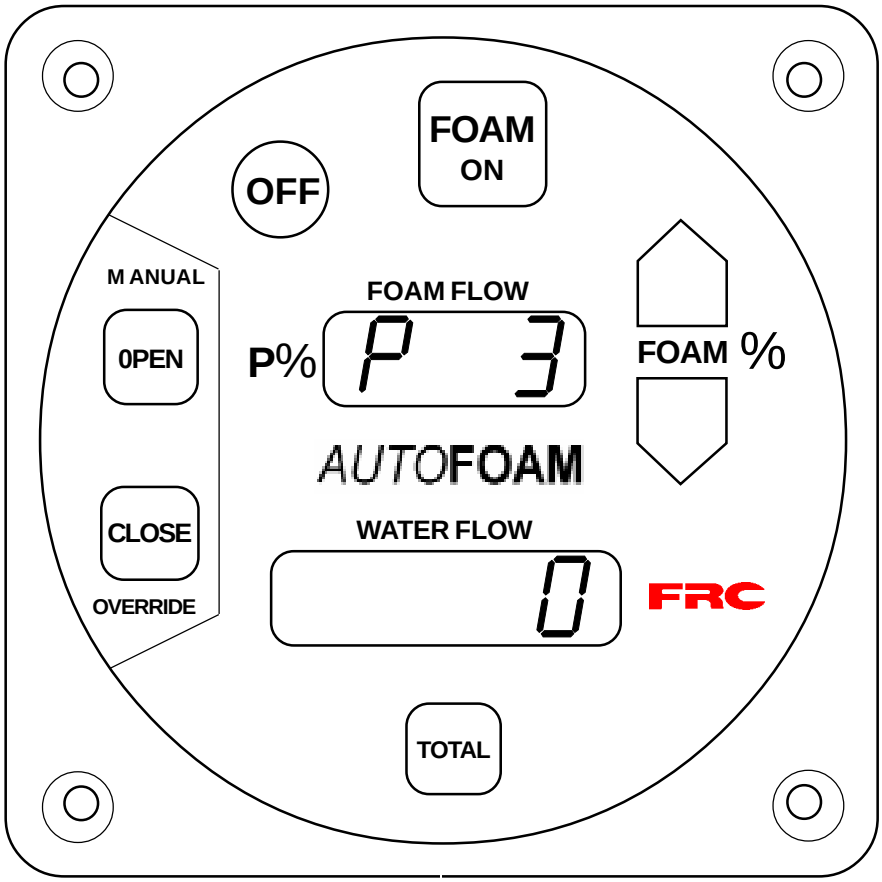

AutoFoam system is on.

Upper display shows % selected (P on left side indicates % selected is displayed) after 3 seconds shows foam flow.

Lower display shows discharge flow.

Figure 9. Sample Displays (Sheet 1 of 3)

AutoFoam system is on.

System is in Fixed Program mode.

Upper display flashes showing –F– alternating with programmed foam flow rate.

Lower display shows discharge flow.

Note: This condition would exist if there is no input from the foam concentrate flow sensors .

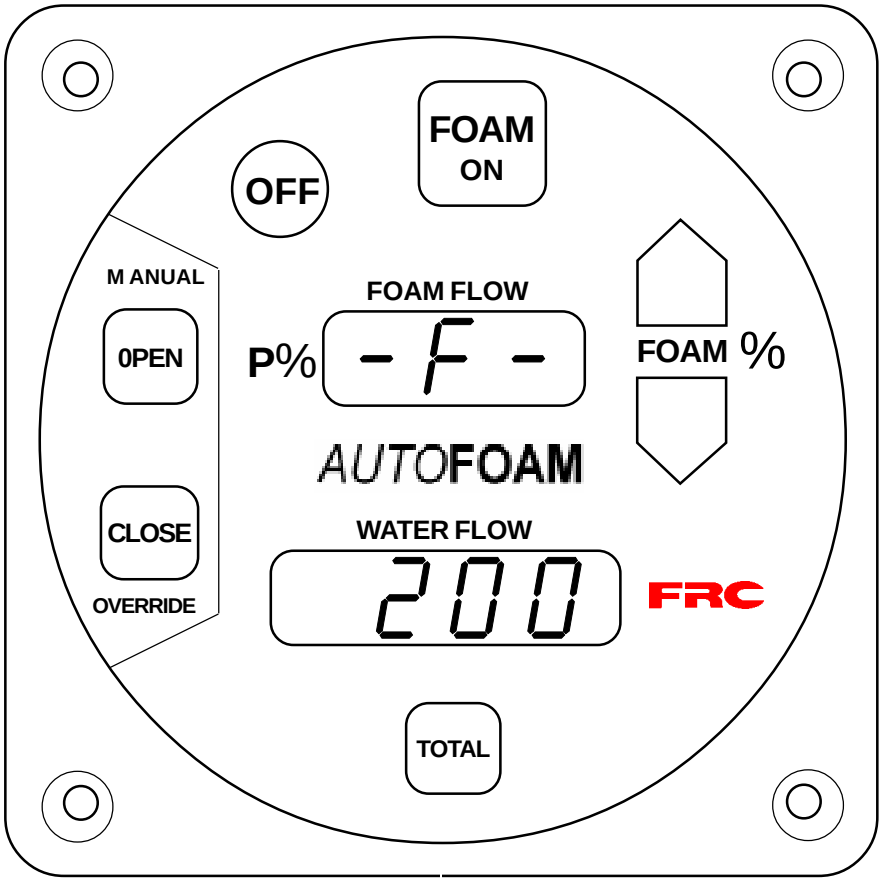

AutoFoam system is on.

System is in Automatic mode.

Upper display shows foam concentrate flow.

Lower display shows discharge flow.

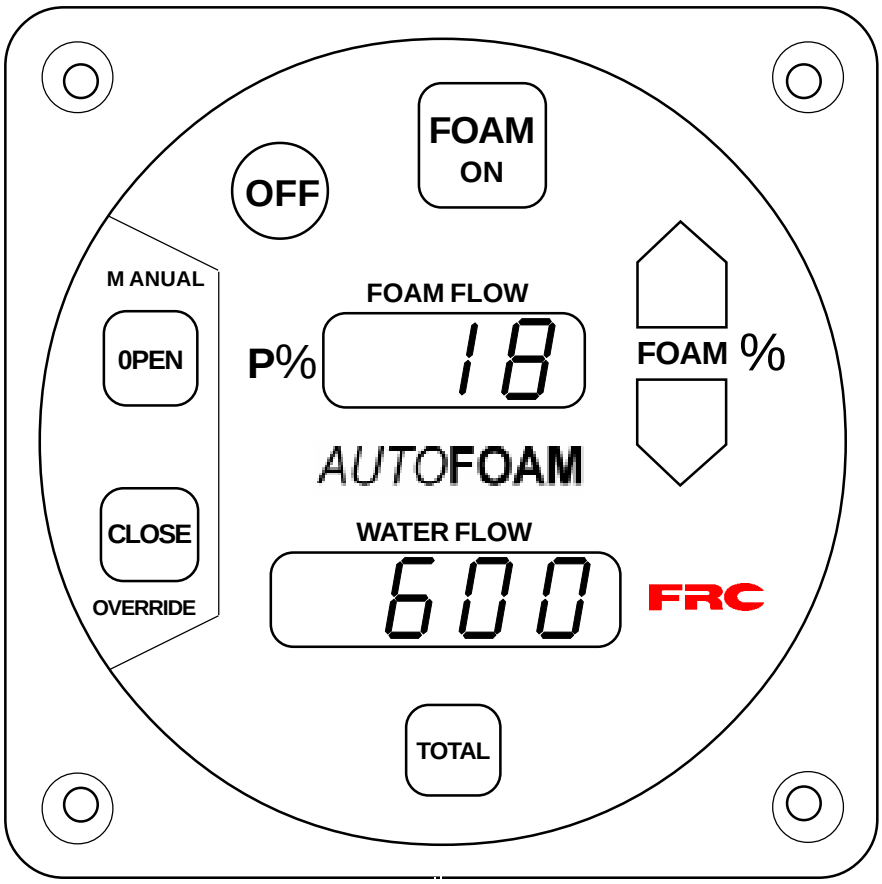

Figure 9. Sample Displays (Sheet 2 of 3)

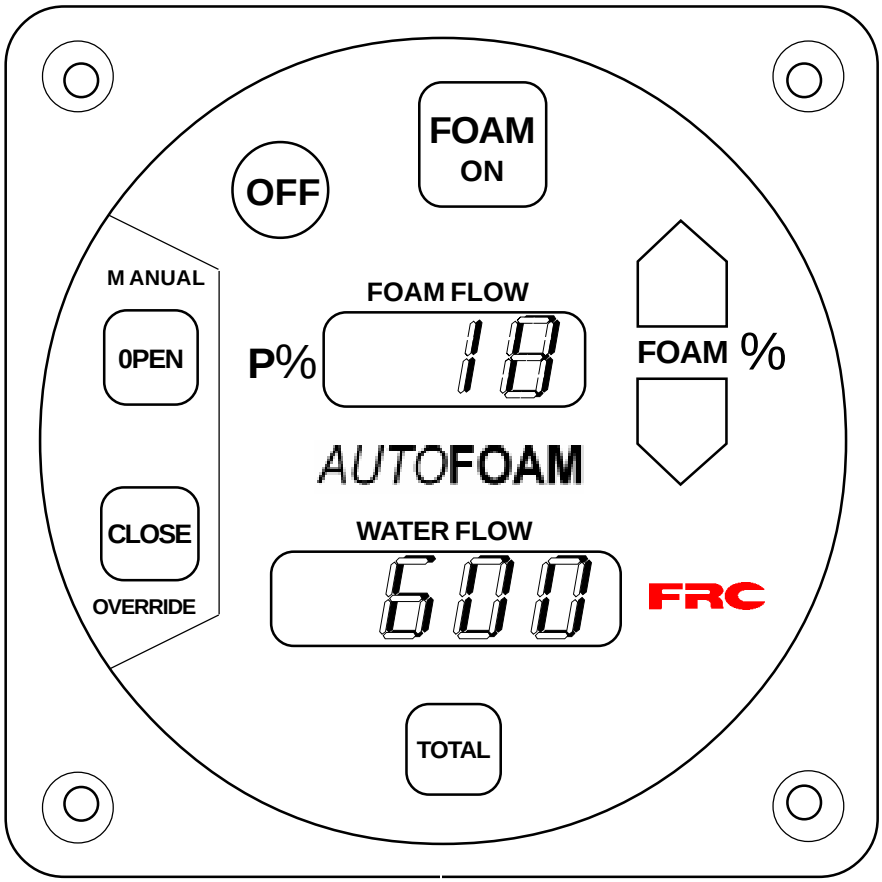

AutoFoam system is on.

System is in Manual mode both upper and lower displays are flashing.

Upper display shows foam concentrate flow.

Lower display shows discharge flow.

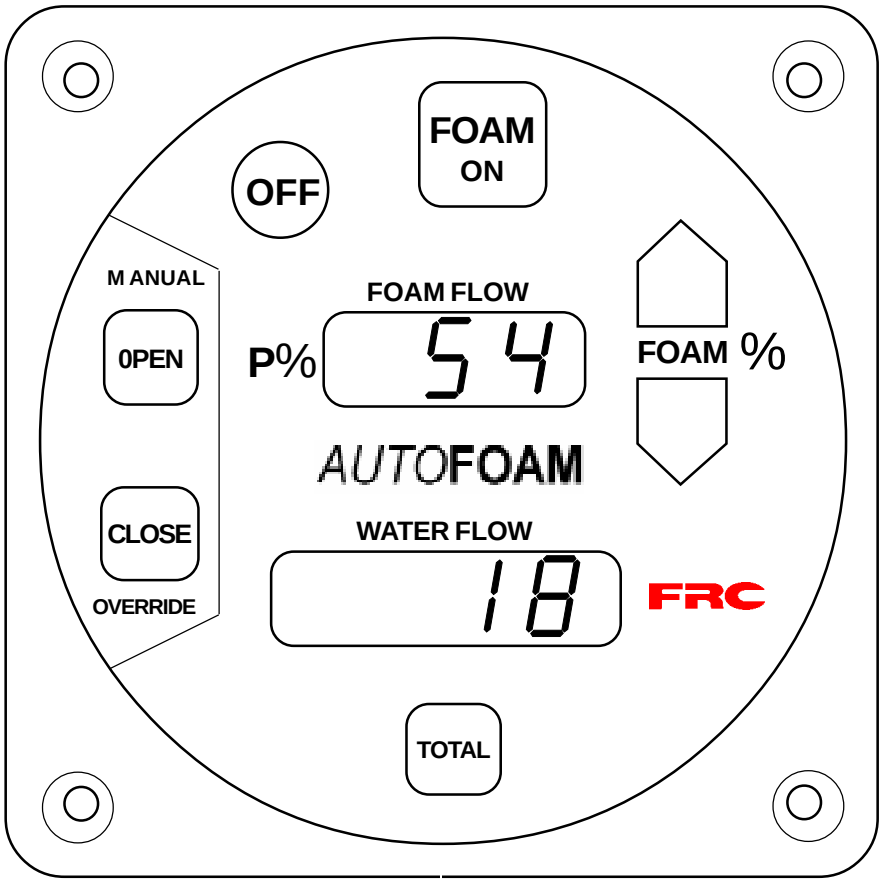

AutoFoam system is on.

TOTAL button is pressed and held.

Upper display (x 1) shows the total gallons of foam concentrate used.

Lower display (x 100) shows the total gallons of water used.

Note: The number in lower display indicates 1800 gallons of water has flowed.

Figure 9. Sample Displays (Sheet 3 of 3)

CALIBRATION

The flow calibration potentiometers are located on the summing device. (Refer to Figure 10.)

Note: Plumbing systems are always unique and may cause small deviations in the factory calibration. It is recommended that the calibration procedure be performed after installation.

Calibrating Discharge Sensor(s)

Note: For multiple discharge flow sensors calibrate each sensor separately.

1. Flow water through the discharge. Ensure a constant pressure is maintained to obtain a steady flow. Use a precalibrated pitot gauge as a reference.
2. Locate the calibration potentiometer on the flow summing box for the sensor being tested (Refer to Figure 10).
3. Loosen the locknut on the discharge flow calibration potentiometer (pot.) Use a small screwdriver to adjust the pot. so that the reading in the lower display on the control module matches the reference flow. Rotating the pot. clockwise will increase the flow rate and counter clockwise will decrease the flow rate. Turn the pot. a little bit at a time to allow the computer averaging to catch up to the new setting (wait for two seconds between adjustments).
4. Select a second reference flow rate to verify the calibration.

Calibrating Foam Concentrate Flow Sensors

The foam concentrate flow sensors are calibrated precisely at the factory as a part of the metering valve assembly and should only require calibration for the following reasons:

Calibration of the discharge sensor(s) is complete and correct, but the foam mixture at the discharge is not correct.

The locked potentiometers for Foam 1 or Foam 2 are accidently moved.

A foam flow sensor or the summing device is replaced.

Note: Calibrate each foam flow sensor separately with the other foam flow sensor cable disconnected.

1. Close the foam isolating valve and fill the foam tank with water.
2. Flow water at a rate of 600 GPM through any discharge.
3. Turn the foam system ON. Press and hold the OPEN button to fully open the metering valve. Both displays will be flashing.
4. Open the foam isolating valve.

5. Time how long it takes for the foam tank to empty. Record the time (in seconds) and the displayed foam flow rate shown on the control module upper display.

6. Calculate the actual foam flow rate: Take the size of the foam tank (total gallon volume) divide it by the time it took to empty the tank. For best accuracy repeat the procedure 2 to 3 times. Ensure there is consistentcy in the result. (Do not average results that vary greatly from one another.)

   Example: (100 gallons/100 seconds) x 60 seconds/minute = 60 GPM

   This gives the actual foam flow rate.

7. Compare the displayed flow rate to the actual flow rate. If they differ, go to step 8 and proceed to calibrate.

8. Locate the calibration potentiometer on the flow summing box for the sensor being tested (Refer to Figure 10).

9. Loosen the locknut on the correct foam flow calibration potentiometer (pot.) Use a small screwdriver to adjust the pot. so that the reading in the upper display on the control module matches the reference flow. Rotating the pot. clockwise will increase the flow rate and counter clockwise will decrease the flow rate. Turn the pot. a little bit at a time to allow the computer averaging to catch up to the new setting (wait for two seconds between adjustments).

10. Repeat steps 1 through 4 and adjust the pot. until the display shows the correct (actual) foam flow (as determined by the calculation).

11. Unplug the first sensor and plug in the second sensor. Repeat steps 1 through 4 and step 7 for the second sensor.

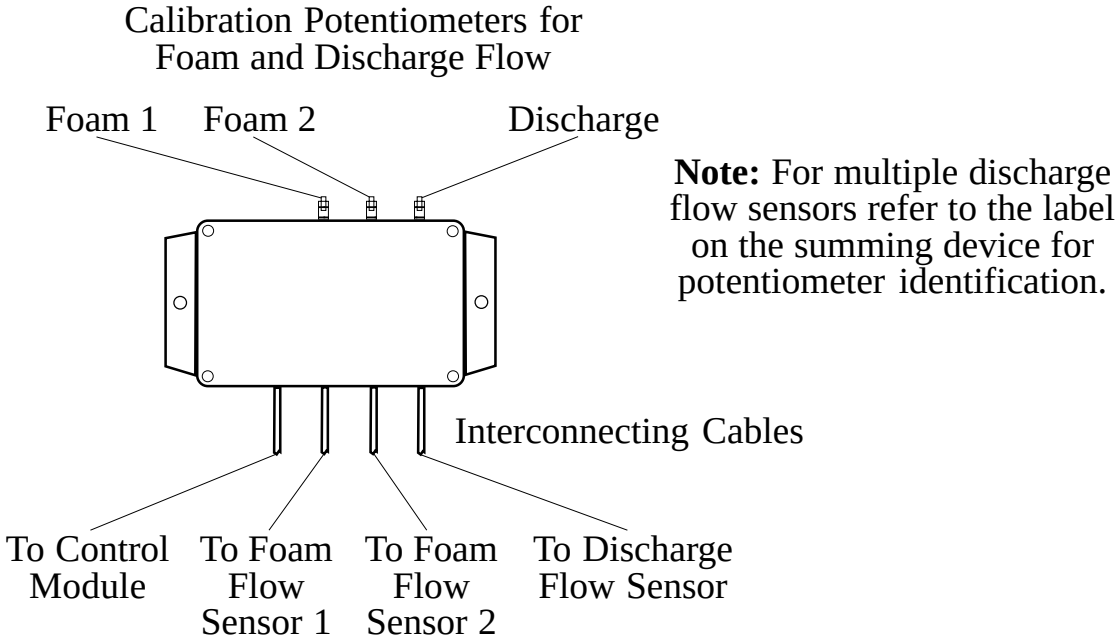

Figure 10. Summing Device

TROUBLESHOOTING TIPS

Perform the Static Operational Check

1. If this check **fails before step 8** the possible problems are:

   Power to the system

   Bad control module

2. If this check **fails after step 8** the possible problems are:

   Wiring between the control module and the metering valve

   Bad control module

   Bad metering valve.

Check Input Cables

1. Check the cables between the flow sensors and the summing device.
2. Check the cable between the summing device and the control module.

Perform the Operational Check

1. If this check **fails step 4** (with discharge flow) the possible problems are:

   Wiring to the discharge flow sensor

   Wiring between the control module and the summing device

   Bad discharge flow sensor

   Bad summing device

   Bad control module

2. If this check **fails step 6 but passes step 7** the possible problems are:

   Wiring to the foam flow sensors

   Wiring between the control module and the summing device

   Clogged flow sensors

   Bad foam flow sensors

   Bad summing device

   Bad control module

3. If this check **fails step 6 and fails step 7** the possible problems are:

   Clogged flow sensors, metering valve, or plumbing

   Bad metering valve

Flushing the System

It is recommended that the system should be flushed after each use to remove the foam from the flow sensors, metering valve, and plumbing. Make sure that the valve to the foam tank is closed when flushing the metering valve so that no water gets into the foam tank.

The metering valve must be flushed periodically to prevent clogging and to ensure sufficient lubrication for the foam flow sensors.

1. Ensure that the pump intake and discharge pressures will be within minimum requirements. (Refer to Table 1.)
2. Ensure that the bypass and foam isolating valves are closed. Open the flush valve and the eductor water valve if installed.
3. Press FOAM ON button.
4. Open discharge and pump water.
5. Press and hold Manual OVERRIDE OPEN button. Run the metering valve to the fully open position.
6. Press the OFF button when the system is flushed out.

Cleaning the Paddlewheel Sensors

The paddlewheel type flow sensors need to spin freely to generate flow data. Should they ever get clogged and stuck, they can be removed for cleaning. Remove the retainer cap which holds the paddlewheel sensor in the housing.

Use plain water to clean the paddlewheel sensors. Do not use solvents.

Be careful when reinstalling the paddlewheel sensor. The paddlewheel will only seat properly when in the correct orientation. (Refer to Install Flow Sensor.)

DRAWINGS

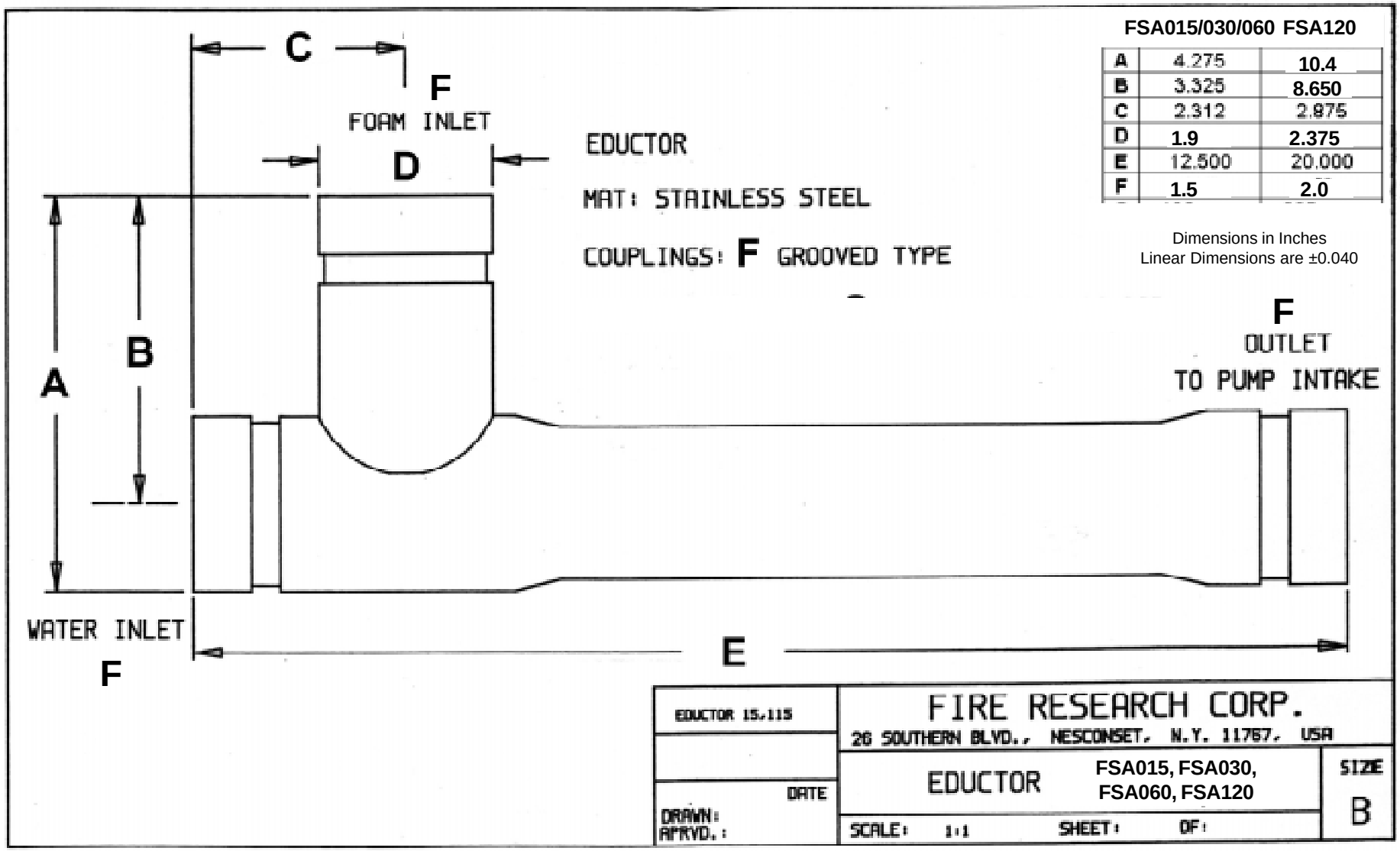

	FSA015/030/060	FSA120
A	4.275	10.4
B	3.325	8.650
C	2.312	2.875
D	1.9	2.375
E	12.500	20.000
F	1.5	2.0

Dimensions in Inches
Linear Dimensions are ±0.040

Figure 11A. Eductor Drawing

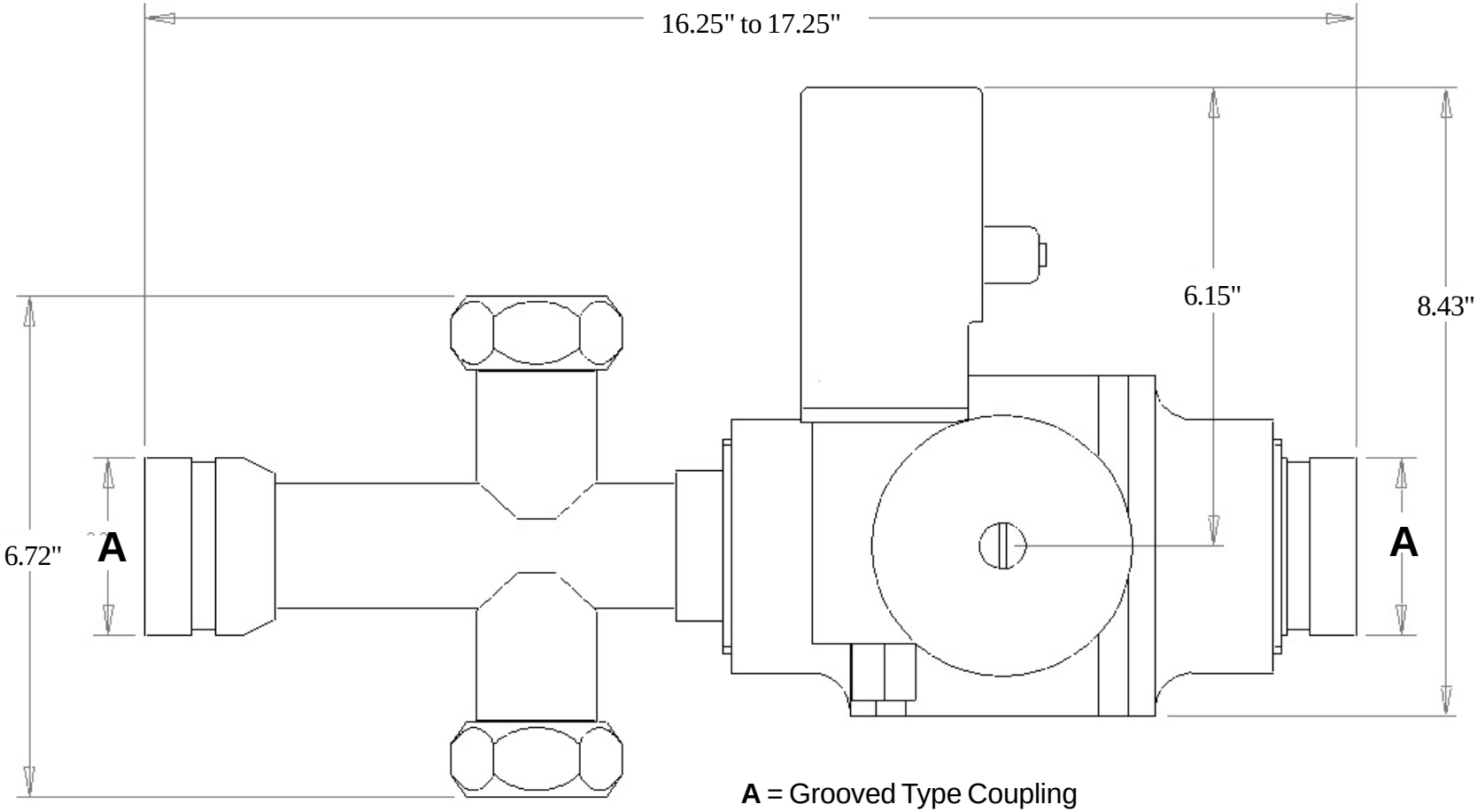

A = Grooved Type Coupling

FSA015	1.9" [1.5" pipe]
FSA060	1.9" [1.5" pipe]
FSA030	1.9" [1.5" pipe]
FSA120	2.375" [2.0" pipe]

Figure 11B. Metering Valve Drawing